CA122IU ECO
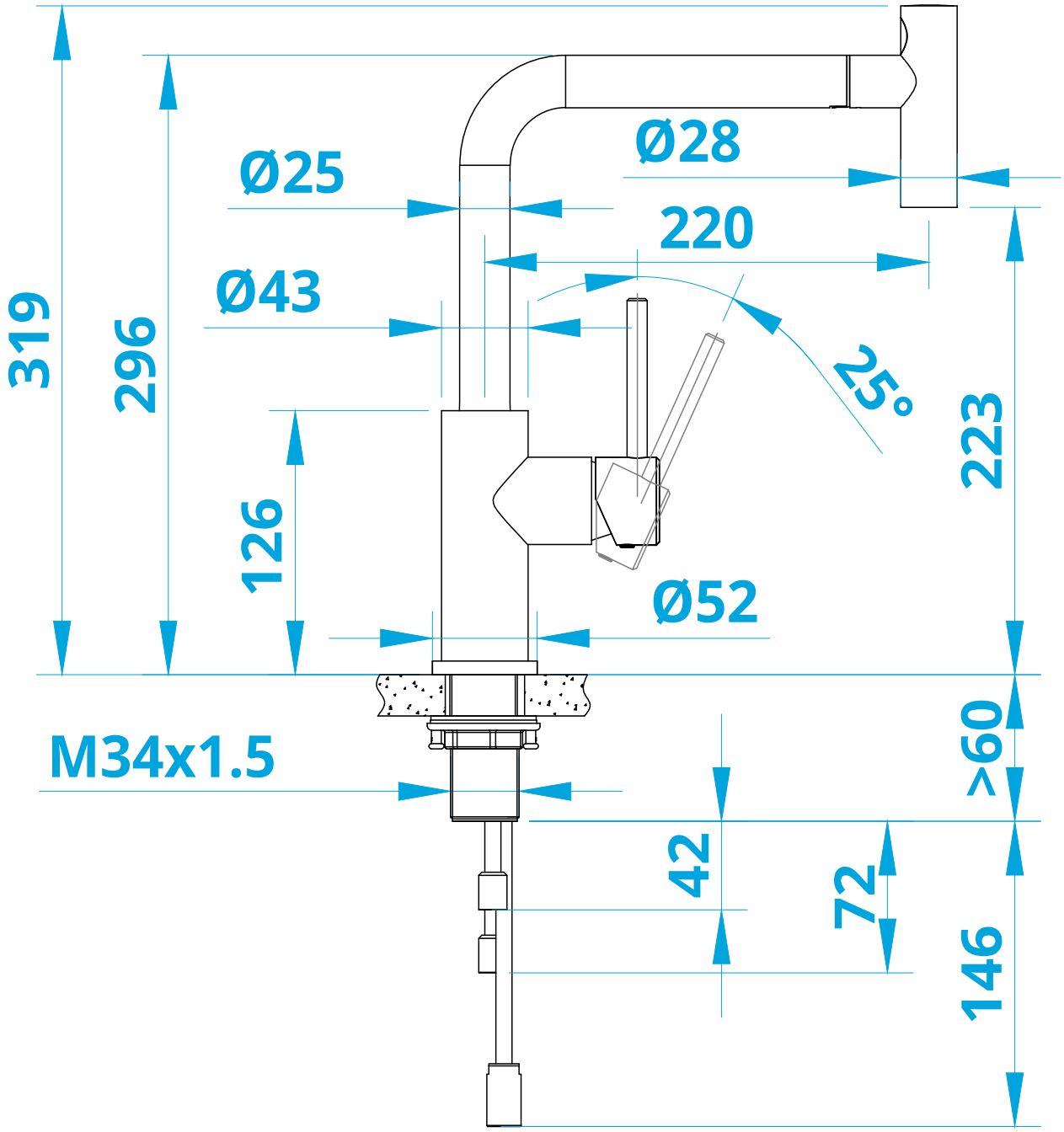
CARESSI®